SEVAR
Drying Technologies

BELT DRYER

PRODUCT BROCHURE

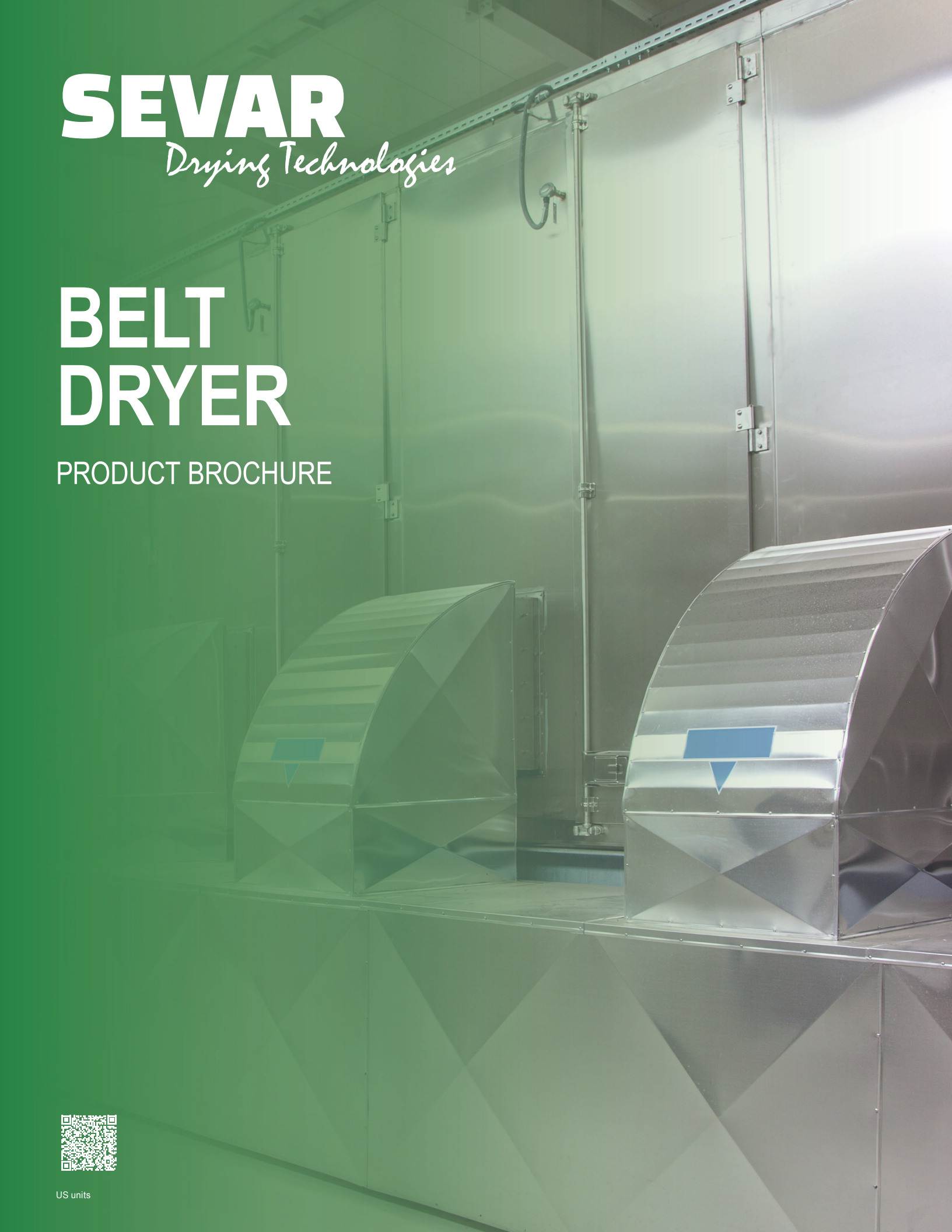

US units

SEVAR
Drying Technologies

BELTDRYER BD3000

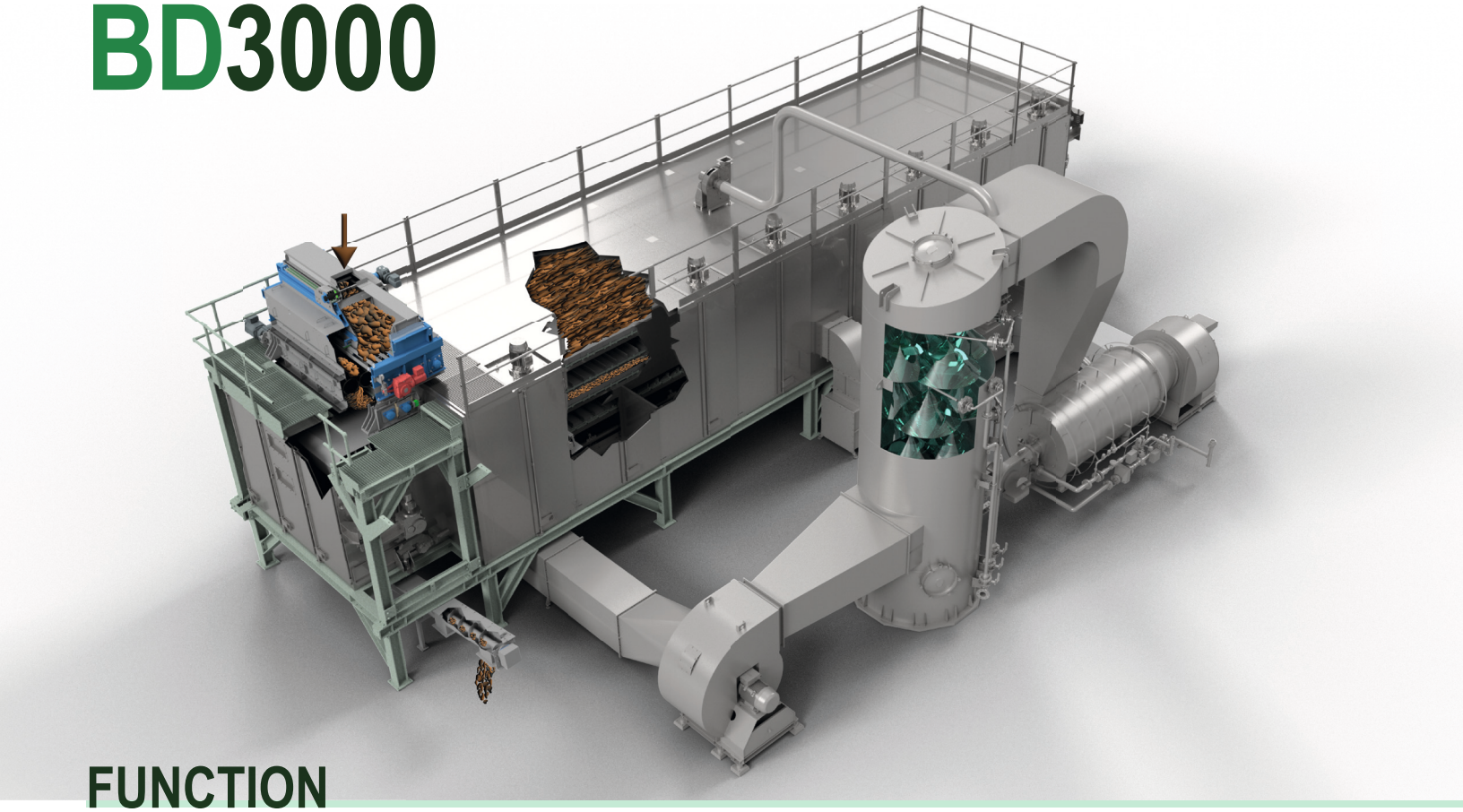

FUNCTION

The SEVAR belt dryer is operated for convective drying of water-containing products such as biosolids, biomass and digestate. The drying temperatures of the circulating drying air are in the range of 160 - 270 °F [70 - 130 °C], depending on the type of heating.
While exposing to hot air the dried product meets the Class A requirement (US EPA Part 503) for land application.
Further applications for the double-path belt dryer are the drying of wood chips, bark, grass, leaves, green cuttings, hulls and husks as well as animal waste, pomace, press residues, biowaste and animal faeces.

The belt dryer is of modular design, it consists of an inlet/outlet module, a number of dryer modules designed according to the throughput or the water evaporation, and a return module. Horizontally the dryer is traversed by two perforated stainless steel conveyor belts arranged one above the other.
The sewage sludge, mechanically dewatered to 18 - 30% dry solids, is continuously and uniformly distributed on the dryer belt via the inlet unit (distribution / dosing / roller press). The roller press - consisting of two counter-rotating grooved rollers - forms the sewage sludge into strands with the effect of increasing the surface area of the material to enhance the heat transfer and water evaporation.

As the wet material is transported on the upper dryer belt through the dryer modules, the drying temperature increases and the residual moisture in the material decays. The lower dryer belt transports the material back to the discharge screw. In the front section of the dryer the dry product cools down. At the outlet of the discharge screw the temperature is approx. 105 °F [40 °C].

In general the belt dryer is used for full drying up to 90% dry solids.
The product is dried gently, as the material is subjected to little mechanical stress. This minimizes dust formation.

The temperatures and the negative pressure in the dryer modules are measured and the belt speed is controlled. This ensures efficient drying time and constant product quality.

DIRECT | INDIRECT HEATED BELT DRYER

The modular design of the belt dryer enables its adaptation to a wide range of site conditions.
Direct heating is realized by burning biogas/ digester gas, natural gas, fuel oil or using high-temperature exhaust gas of the CHP unit in a burner plenum.
Indirect heating of the belt dryer is technically implemented with internal heat exchangers fed with hot water, steam or thermal oil. Jacket water of a CHP unit is used as heating medium. The hot exhaust air of the belt dryer as well as the final effluent of a WWTP contain a thermal energy potential for drying. The operation of a heat pump uses this energy potential to generate hot water.
A combination of direct and indirect heating is technically possible.

DIRECT

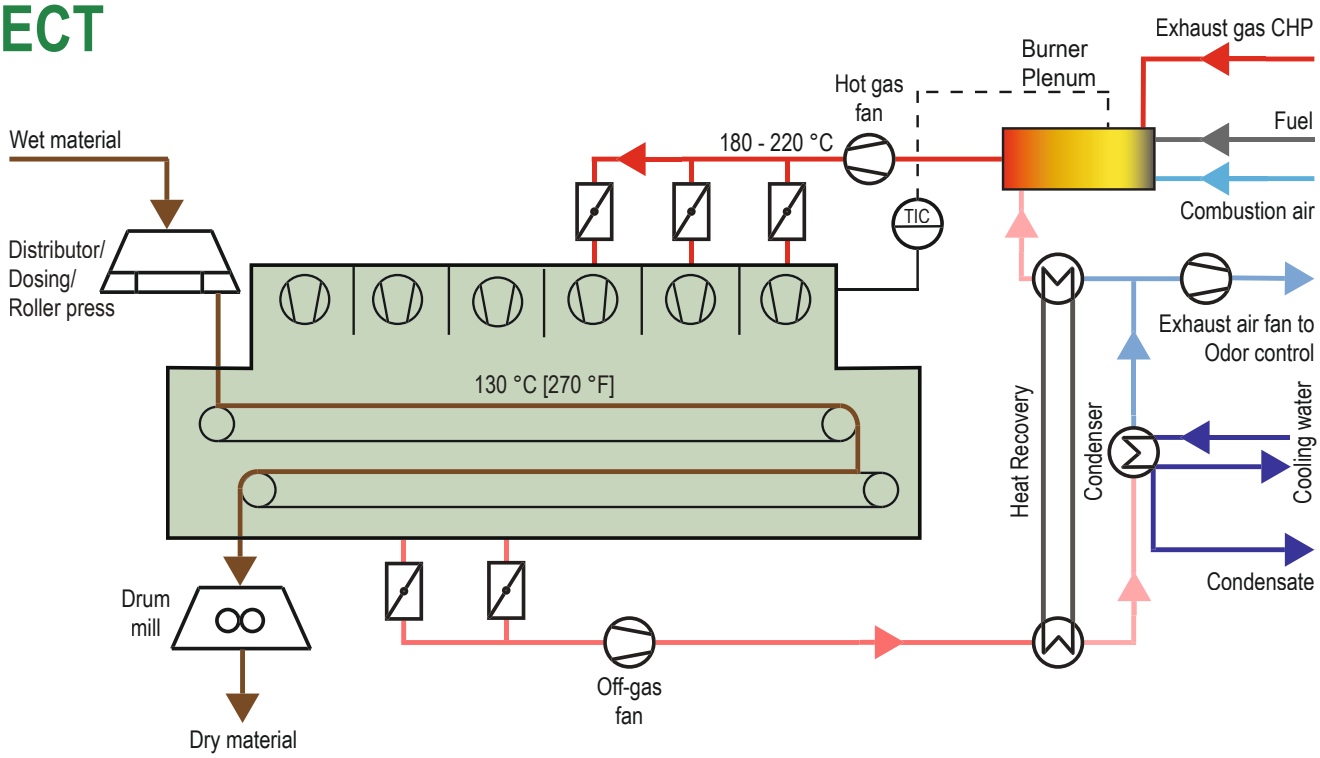

INDIRECT

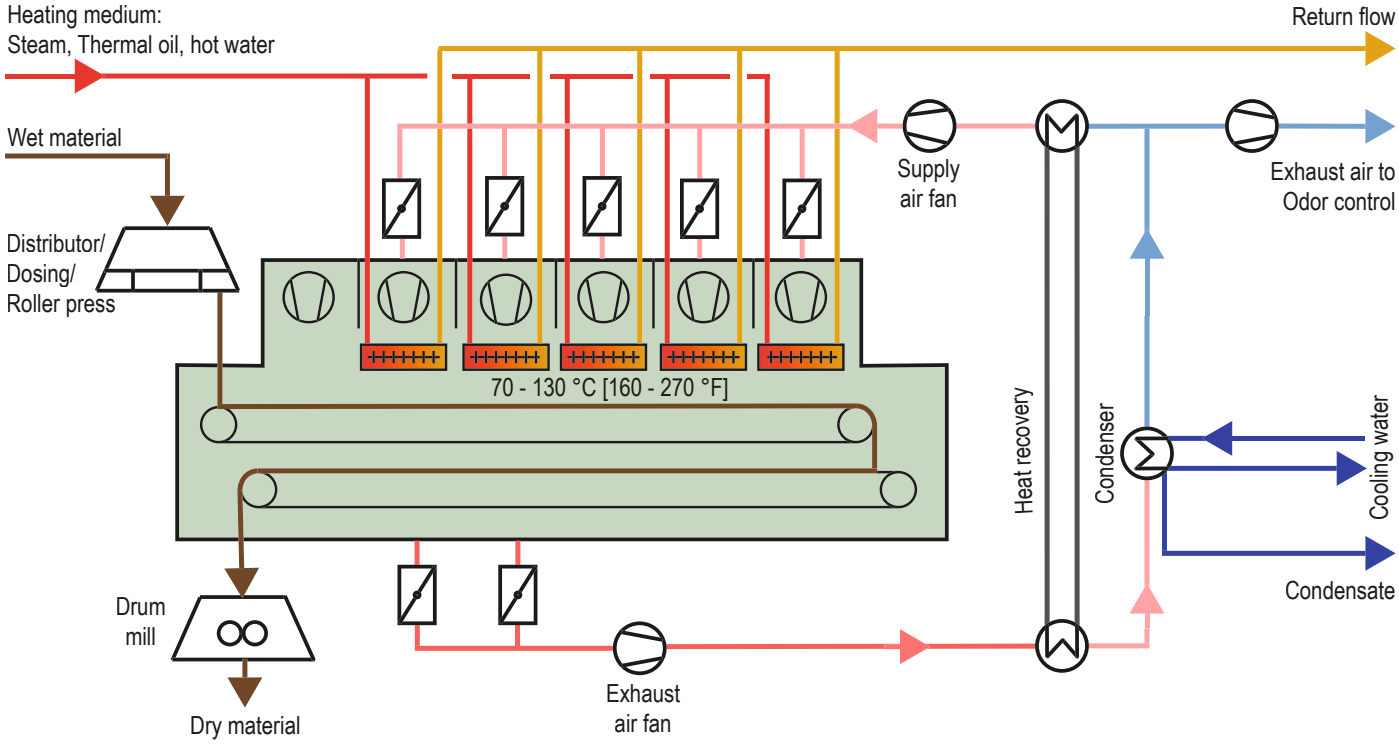

ADVANTAGES

- Slow moving parts: Gentle drying process
- Low dust formation: Safe atmosphere
- Low drying temperatures: 160 - 270 °F [70 - 130 °C]
- Perforated dryer belt made of stainless steel 304 / 316L: High corrosion and temperature resistance, long service life
- Easy accessibility
- Belt speed / retention time variable: 60 - 180 min
- Modular design: Expandability for higher throughput / water evaporation capacity
- Various heating options
- Energy optimized: Heat recovery
- High thermal efficiency: Optimized process air circulation
- Continuous operation: Low operating and maintenance costs
- Operation with negative pressure: Low odor emission

CROSS SECTION DRYER MODULE

DIRECT

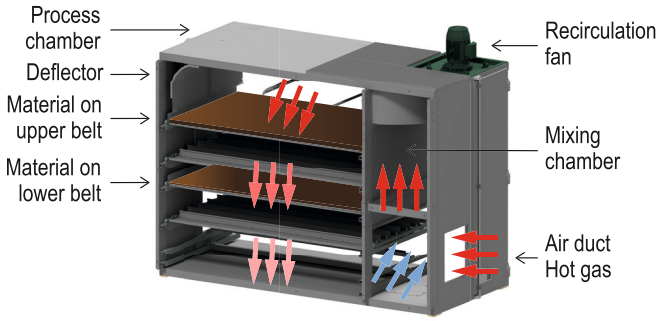

INDIRECT

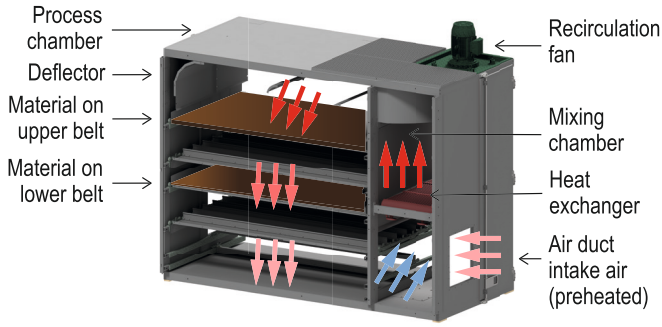

The dryer module is divided into process and mixing chambers. The supply air fan placed outside the dryer transports the (recycled) supply air via air ducts into the individual dryer modules. In the mixing chamber, the supply air is taken over by the respective recirculation fan, passed through the heat exchanger (indirect heating) for air heating and mixed with the recirculating air of the process chamber. The recirculation fan transports the drying air in the process chamber across the transport direction through the material layer of the upper and lower dryer belt.

DATA

Size / No. of Modules	Water evaporation* t/h (lb/h)	Dimension [ft (mm)]		
		Length	Height	Width
BD 3000/4	1.1 (2,200)	36.7' (11,200)	approx. 19.7' (6,000) (with sub-frame)	Total: approx. 21.3' (6,500) Module: approx. 13.8' (4,200) (without heat recovery)
BD 3000/8	2.2 (4,400)	62.0' (18,900)		
BD 3000/10	2.8 (5,600)	74.8' (22,800)		
BD 3000/12	3.3 (6,600)	87.6' (26,700)		
BD 3000/16	4.4 (8,800)	112.9' (34,400)		

* at appropriate drying temperature
We reserve the right to alter the data at any time without prior notice.

SEVAR AG

SEVAR AG emerged in 2020 from the environmental technology division of Haarslev Industries A/S. The over 30 years proven **technology of belt drying** is continued under the already wellknown name SEVAR with a motivated team. The young German company with headquarters and production near Karlsruhe is supported by an international network of partners and agents. SEVAR designs and manufactures equipment for the **thermal treatment of municipal and industrial biosolids**, biomass and digestate. The treatment of the humid exhaust air resulting from the drying process with **condensation and odor control** is also considered. Reference plants are available for visiting worldwide.

REFERENCES (SELECTION)

HOWARD COUNTY, SAVAGE, MD (USA)

LPWRP

- Scope of supply: 2 lines Belt Dryer BD 3000/8 with reception bin, feed pumps for dewatered sewage sludge, back-mixing, spray condensers, dry material storage silos
- Full drying: Digested municipal sewage sludge
- Direct heating with biogas or natural gas
- 20% DS_in / 90% DS_out
- Throughput_wet: 44,100 t/a (5.5 t/h)
- Water evaporation: 4.4 t_{H2O}/h
- 24 h/d, fully automatic
- Commissioning: 2021

DIRECT HEATING: BIOGAS

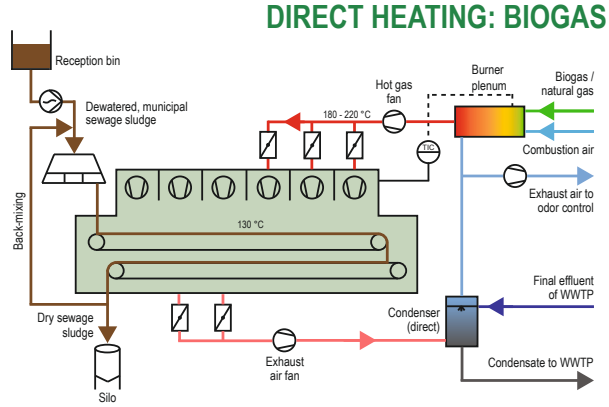

ZORBAU (DEU)

KTA

- Scope of supply: Belt Dryer BD 3000/16 with building, wet cake reception bunker, conveying systems, impurity seperator, chrusher mill, dry material storage silo
- Full drying: Digested municipal sewage sludge
- Indirect heating with steam of waste incineration plant
- 20 - 30% DS_in / 90% DS_out
- Throughput_wet: 55,100 t/a (6.9 t/h)
- Water evaporation: 5.0 t_{H2O}/h
- 24 h/d, fully automatic
- Commissioning: 2017

INDIRECT HEATING: SUPERHEATED STEAM

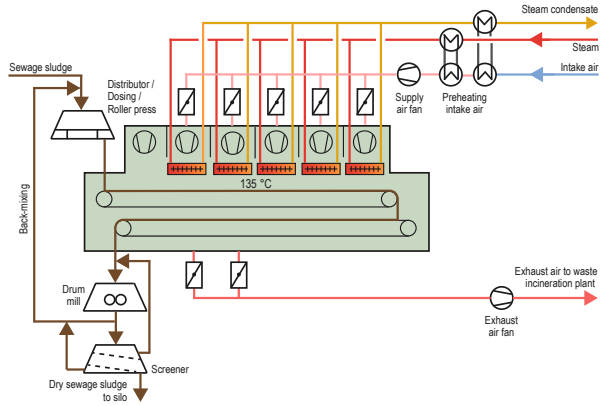

QUEBEC (CAN)

CTBM

- Scope of supply: Belt Dryer BD 3000/6 with spray condenser, heat exchanger for generation of warm water with 150 °F
- Full drying: Organic residues (digestate) of anaerobically digested compost (80%) mixed with wood chips (20%)
- Indirect heating with thermal oil [480/355 °F]
- 38 % DS_in / 83 % DS_out
- Throughput_wet: 20,400 t/a (2.5 t/h)
- Water evaporation: 1.4 t_{H2O}/h
- 24 h/d, fully automatic
- Commissioning: 2023

INDIRECT HEATING: THERMAL OIL

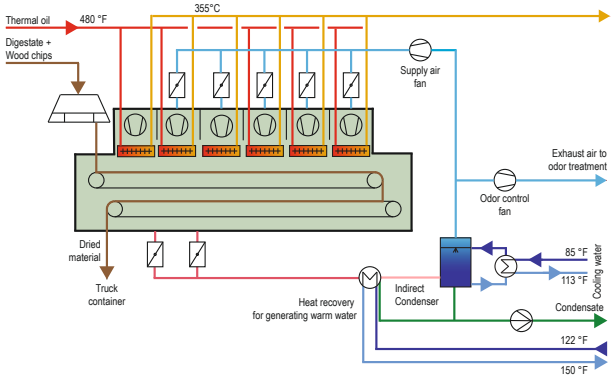

CITY & COUNTY OF HONOLULU, HI (USA)

HONOULIULI WWTP

- Scope of supply: 2 lines of Belt Dryer BD 3000/8, exhaust air treatment with condenser and wet chemical scrubber, heat recovery with preheating of intake air, burner plenum
- Full drying: Digested municipal sewage sludge
- Direct heating with (1) biogas or natural gas and (2) Exhaust gas of CHP, heat recovery with jacket water
- 23% DS_in / 92% DS_out
- Throughput_wet: 44,100 t/a (5.5 t/h)
- Water evaporation: 4.2 t_{H2O}/h
- 24 h/d, fully automatic
- Commissioning: Beginning 2024

DIRECT HEATING: (1) BIOGAS (2) EXHAUST GAS CHP

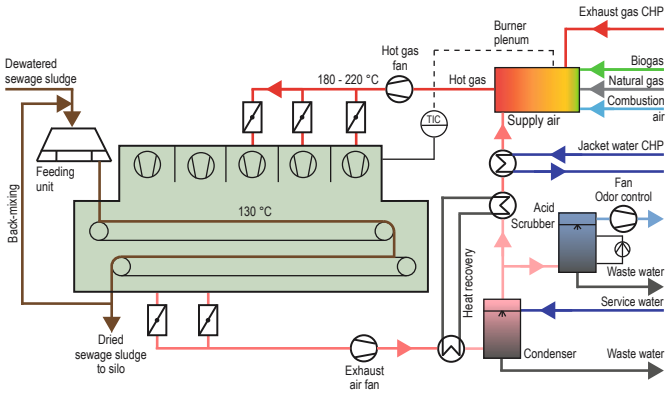

DS = Dry solids
t = tn.sh. (US-unit)

SEVAR
Drying Technologies

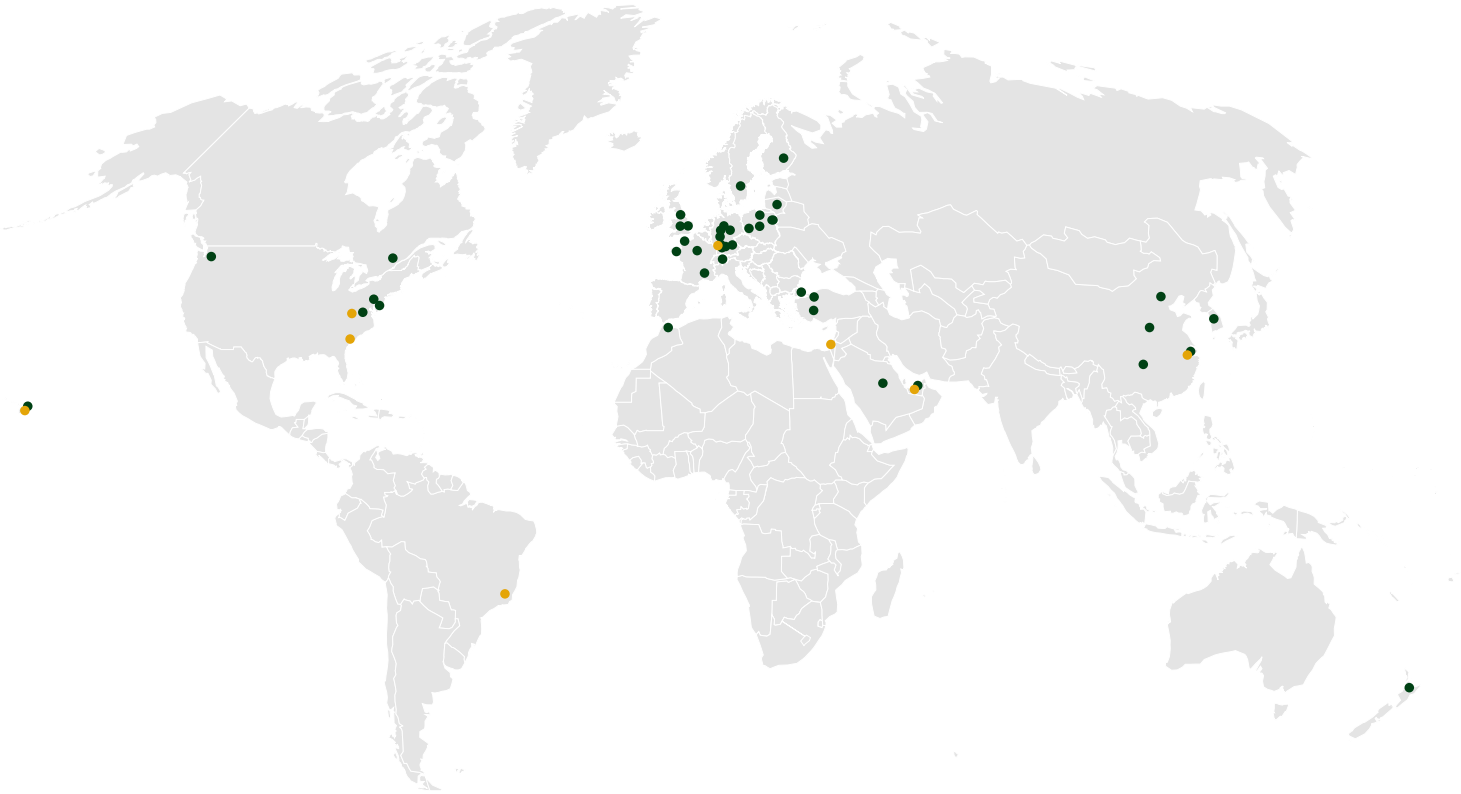

References (green) and partners (yellow) worldwide

SEVAR AG
Im Ochsenstall 18
76689 Karlsdorf-Neuthard
GERMANY
+49 (0) 7251 41253
sevar@sevarag.com | www.sevarag.com

OUR PARTNERS

USA
BCR Environmental, Inc.
100 N. Laura Street, Suite 601
Jacksonville, FL 32202

Sherwood Logan & Associates, Inc.
2140 Renard Ct.
Annapolis, MD 21401

Promark Corporation
92-1353 Hauone St.
Kapolei, HI 96709

BRAZIL
VITA Ambiental Engenharia
Rua Tagipuru, 235 - Barra Funda
São Paulo - SP, 01156-000

CHINA
Ekosep Engineering Co., Ltd.
Lotus International Plaza No. 7866 Humin Rd.
Minhang District
Shanghai

ISRAEL
CRM Technologies (1995) LTD.
71 Hanadive St.
Herzeliya 4648583

UAE
Safe Technical Equipment Services LLC
Shed No: 138-A, Dubai Maritime City
Dubai